FV8528L−F

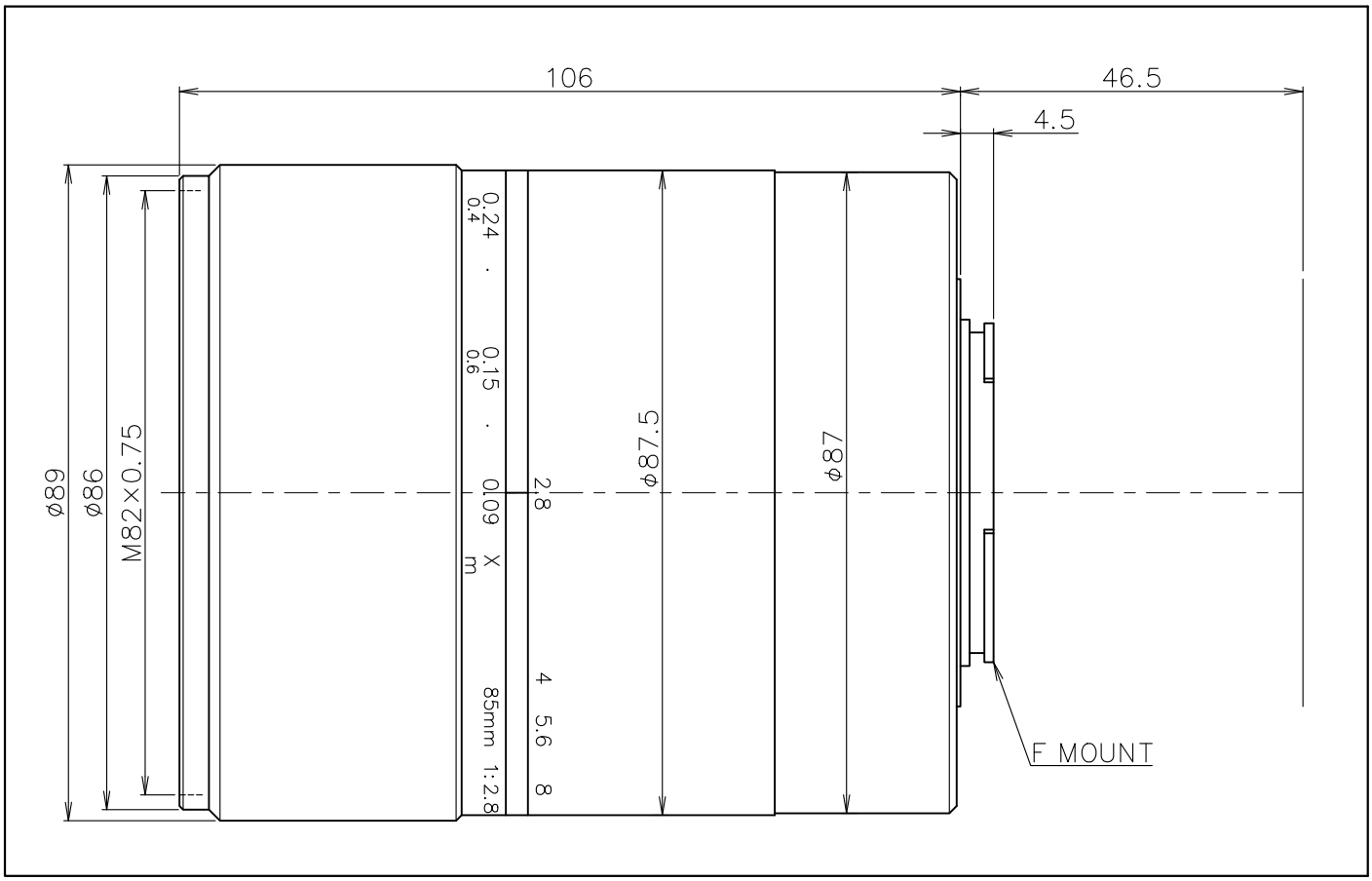

Model No.	FV8528L−F
Application	Fixed Focal Lens for Large Format
Focal length	85mm
Maximum Object Magnification	0.408×
W D	250mm
∞ F NO.	2.8
Object side NA	0.051
Optical Distortion	−0.10%
Weight	780g
Image Circle	φ45
Filter Pitch	M82 P=0.75
Mount	F

- Specifications mentions above are design values.
- Specifications and dimensions are subject to change without notice.