# HF5018V-2

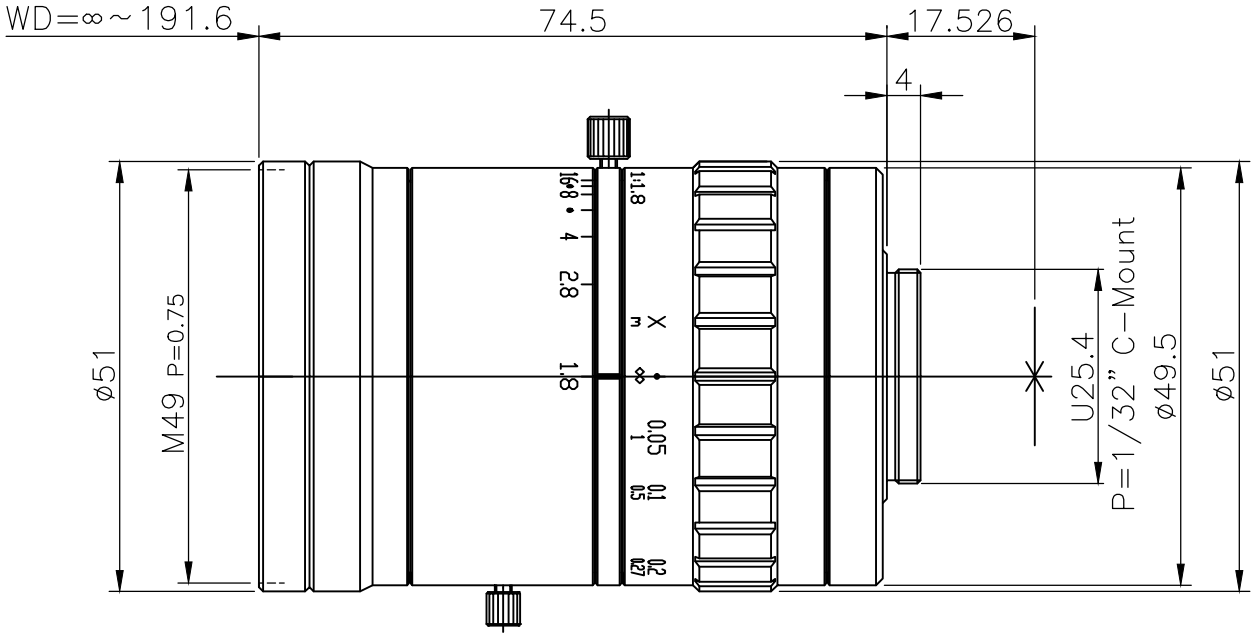


| | | |
|---|---|---|
| Model | | HF5018V-2 |
| Application | | Machine Vision Lens for 5 Mega |
| Focal Length | | 50mm |
| Maximum Magnification | | 0.3X |
| WD | | 191.6mm～INF |
| Maximum Aperture | | 1.8(∞) |
| Angle of View | 1／2 | 7.32°×5.50° |
| | 2／3 | 10.06°×7.55° |
| | 1.1 | 14.00°×14.00° |
| TV Distortion | 1／2 | −0.005% |
| | 2／3 | −0.01% |
| | 1.1 | −0.03% |
| Weight | | 228g |
| Max. Compatible CCD | | 1.2inch(φ21.4mm) |
| Mount | | C-Mount |
| Filter Pitch | | M49 P=0.75 |

○Indicated specifications are design values.