TL08-65R

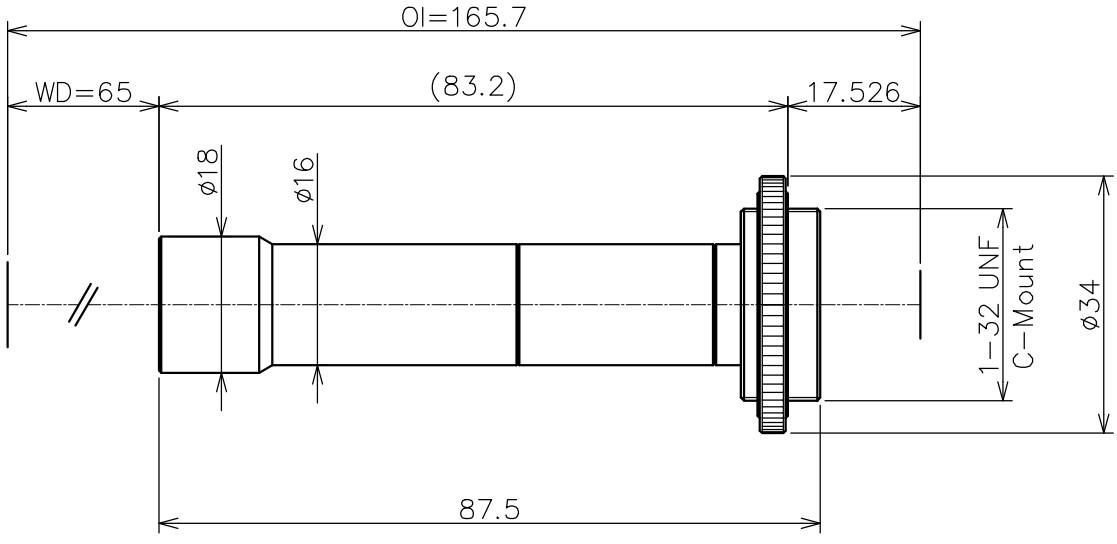

Model		TL08-65R
Application		Object side Telecentric Lens
Magnification		0.8x
W D		65mm
O I		165.7mm
F NO.		14.8
Object side NA		0.027
Resolution		12.3μ
Depth of field		1.85mm
TV Distortion	1／3”	0.00%
	1／1.8”	0.00%
Weight		—
Maximum Comatible CCD		1／3” , 1／2” , 1／1.8”
Mount		C Mount

○Specifications mentioned above are design values.

○Resolution indicates a theoretical resolution at a wavelength of 550nm.

○Depth of field is calculating using 1/2” camera (permissible circle of confusion 40μ).

○Specifications and dimensions are subject to change without notice.