TL60C-240

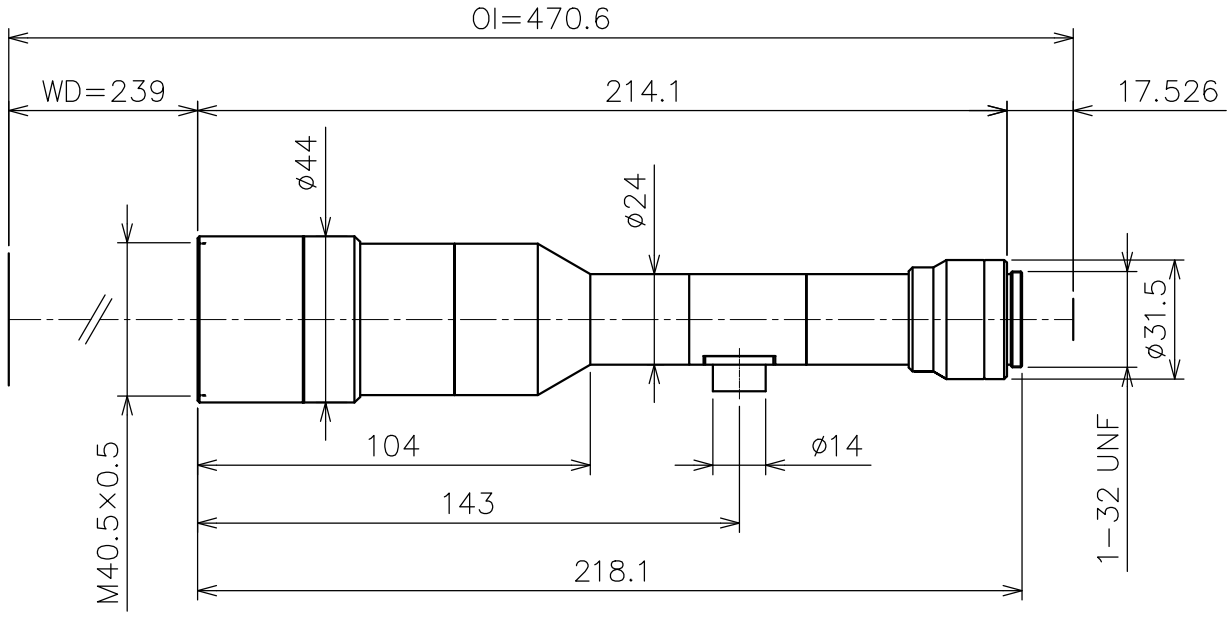

Model		TL60C-240
Application		Object side Telecentric Lens
Magnification		6x
W D		239mm
O I		470.6mm
F NO.		42.9
Object side NA		0.07
Resolution		4.8
Depth of field		95μ
TV Distortion	1／2”	0.02%
	2／3”	0.02%
Weight		—
CCD		1／3” , 1／2” , 2／3”
Mount		C Mount

○Specifications mentioned above are design values.

○Resolution indicates a theoretical resolution at a wavelength of 550nm.

○Depth of field is calculating using 1/2” camera (permissible circle of confusion 40μ).

○Specifications and dimensions are subject to change without notice.